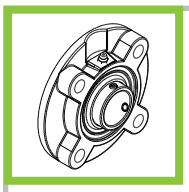

UCFC 200 SERIES

Normal-Duty Flange Cartridge Setscrew Lock

(Metric-Based Housing)

TURNER®
Mounted Bearings

Available Seal Styles:

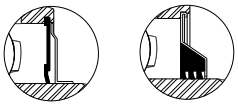

Standard L3

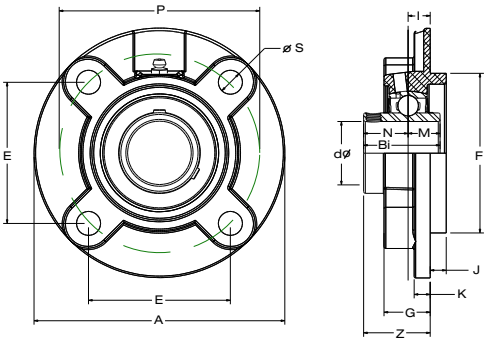

Bearing Number	Shaft Dia. d in. mm.	Dimensions in. mm. A	P	E	I	S	J	K	G	F*	Z	Bi	N	M	Bolt Used in. mm.	Load Rating lbs. kN. Dynamic C_r	Static C_{or}	Bearing Insert	Housing Number	Weight lbs. kg.
UCWFC 201	12	3.54	2.76	1.95	0.39	0.39	0.16	0.20	0.75	2.17	1.02	1.0787	0.3937	0.6260	5/16	2,147	1,075	UCW 201	WFC 203	1.3
UCWFC 201-8	1/2	90.0	70.0	49.5	10.0	10.0	4.0	5.0	19.0	55.0	25.9	27.4	10.0	15.9	M8	9.55	4.78	UCW 201-8		0.6
UCWFC 202	15																	UCW 202		
UCWFC 202-10	5/8																	UCW 202-10		
UCWFC 203	17																	UCW 203		
UCFC 204-12	3/4	3.94	3.071	2.17	0.39	0.47	0.20	0.24	0.81	2.441	1.11	1.2205	0.5000	0.7205	3/8	2,883	1,496	UC 204-12	FC 204	1.7
UCFC 204	20	100.0	78.0	55.1	10.0	12.0	5.0	6.0	20.5	62.0	28.3	31.0	12.7	18.3	M10	12.82	6.65	UC 204		0.8
UCFC 205-14	7/8	4.53	3.54	2.50	0.39	0.47	0.24	0.28	0.83	2.76	1.17	1.3425	0.5630	0.7795	3/8	3,155	1,810	UC 205-14	FC 205	2.2
UCFC 205-15	15/16	115.0	90.0	63.6	10.0	12.0	6.0	7.0	21.0	70.0	29.8	34.1	14.3	19.8	M10	14.03	8.05	UC 205-15		1.0
UCFC 205	25																	UC 205		
UCFC 205-16	1																	UC 205-16		
UCFC 206-17	1 1/16	4.92	3.94	2.78	0.39	0.47	0.31	0.31	0.91	3.15	1.27	1.5000	0.6260	0.8740	3/8	4,377	2,569	UC 206-17	FC 206	2.9
UCFC 206-18	1 1/8	125.0	100.0	70.7	10.0	12.0	8.0	8.0	23.0	80.0	32.2	38.1	15.9	22.2	M10	19.47	11.43	UC 206-18		1.3
UCFC 206	30																	UC 206		
UCFC 206-19	1 3/16																	UC 206-19		
UCFC 206-20	1 1/4																	UC 206-20		
UCFC 207-20	1 1/4	5.31	4.33	3.06	0.43	0.55	0.31	0.35	1.02	3.54	1.43	1.6890	0.6890	1.0000	1/2	5,775	3,497	UC 207-20	FC 207	3.9
UCFC 207-21	1 5/16	135.0	110.0	77.8	11.0	14.0	8.0	9.0	26.0	90.0	36.4	42.9	17.5	25.4	M12	25.69	15.56	UC 207-21		1.8
UCFC 207-22	1 3/8																	UC 207-22		
UCFC 207	35																	UC 207		
UCFC 207-23	1 7/16																	UC 207-23		
UCFC 208-24	1 1/2	5.71	4.72	3.34	0.43	0.55	0.39	0.35	1.02	3.94	1.62	1.9370	0.7480	1.1890	1/2	6,634	4,079	UC 208-24	FC 208	4.4
UCFC 208-25	1 9/16	145.0	120.0	84.8	11.0	14.0	10.0	9.0	26.0	100.0	41.2	49.2	19.0	30.2	M12	29.51	18.14	UC 208-25		2.0
UCFC 208	40																	UC 208		
UCFC 209-26	1 5/8	6.30	5.20	3.67	0.39	0.63	0.47	0.39	1.02	4.13	1.58	1.9370	0.7480	1.1890	9/16	7,160	4,676	UC 209-26	FC 209	5.5
UCFC 209-27	1 11/16	160.0	132.0	93.3	10.0	16.0	12.0	10.0	26.0	105.0	40.2	49.2	19.0	30.2	M14	31.85	20.80	UC 209-27		2.5
UCFC 209-28	1 3/4																	UC 209-28		
UCFC 209	45																	UC 209		
UCFC 210-30	1 7/8	6.50	5.43	3.84	0.39	0.63	0.47	0.55	1.10	4.33	1.68	2.0315	0.7480	1.2835	9/16	7,867	5,330	UC 210-30	FC 210	6.5
UCFC 210-31	1 15/16	165.0	138.0	97.6	10.0	16.0	12.0	14.0	28.0	110.0	42.6	51.6	19.0	32.6	M14	35.00	23.71	UC 210-31		3.0
UCFC 210	50																	UC 210		
UCFC 210-32	2																	UC 210-32		
UCFC 211-32	2	7.28	5.91	4.18	0.51	0.75	0.47	0.55	1.18	4.92	1.83	2.1890	0.8740	1.3150	5/8	9,743	6,608	UC 211-32	FC 211	8.8
UCFC 211-34	2 1/8	185.0	150.0	106.1	13.0	19.0	12.0	14.0	30.0	125.0	46.4	55.6	22.2	33.4	M16	43.34	29.40	UC 211-34		4.0
UCFC 211	55																	UC 211		
UCFC 211-35	2 3/16																	UC 211-35		
UCFC 212-36	2 1/4	7.68	6.30	4.45	0.67	0.75	0.47	0.59	1.38	5.32	2.23	2.5630	1.0000	1.5630	5/8	10,720	7,516	UC 212-36	FC 212	10.8
UCFC 212	60	195.0	160.0	113.1	17.0	19.0	12.0	15.0	35.0	135.0	56.7	65.1	25.4	39.7	M16	47.69	33.43	UC 212		4.9
UCFC 212-38	2 3/8																	UC 212-38		
UCFC 212-39	2 7/16																	UC 212-39		
UCFC 213-40	2 1/2	8.07	6.69	4.73	0.63	0.75	0.55	0.59	1.42	5.71	2.19	2.5630	1.0000	1.5630	5/8	12,859	8,994	UC 213-40	FC 213	11.8
UCFC 213	65	205.0	170.0	120.2	16.0	19.0	14.0	15.0	36.0	145.0	55.7	65.1	25.4	39.7	M16	57.20	40.01	UC 213		5.4
UCFC 214-43	2 11/16	8.46	6.97	4.93	0.67	0.75	0.55	0.63	1.50	5.91	2.42	2.9370	1.1890	1.7480	5/8	13,981	9,869	UC 214-43	FC 214	15.2
UCFC 214-44	2 3/4	215.0	177.0	125.1	17.0	19.0	14.0	16.0	38.0	150.0	61.4	74.6	30.2	44.4	M16	62.19	43.90	UC 214-44		6.9
UCFC 214	70																	UC 214		
UCFC 215-47	2 15/16	8.66	7.24	5.12	0.71	0.75	0.63	0.67	1.54	6.30	2.46	3.0630	1.3110	1.7520	5/8	14,974	10,757	UC 215-47	FC 215	16.5
UCFC 215	75	220.0	184.0	130.1	18.0	19.0	16.0	17.0	39.0	160.0	62.5	77.8	33.3	44.5	M16	66.61	47.85	UC 215		7.5
UCFC 215-48	3																	UC 215-48		

*Tolerance +0.000" / -0.002"

Turner mounted bearings are a product of Baart Industrial Group (Baart). While Baart has tried to ensure the accuracy of the information contained in this document, Baart accepts no responsibility for inaccurate in, or changes to, such information. All rights reserved. ©2020